Instruction Manual

Electric ovens

Models:

STB 604/606/610/616T/586/686/886/1086/1886T V7

(electric/gas)

ATTENTION: Please, read these instructions before using this unit.

CONTENTS

1. CE CERTIFICATION 5

2. WARRANTY 6

3. GENERAL AND SAFETY STANDARDS 7

4. SAFETY INSTRUCTIONS, TRANSPORT AND MAINTENANCE 10

4.1 Unpackaging 10

4.2 Transport 10

4.3 Preliminary operations 11

4.4 Placing the unit 11

4.5 Trolley positioning (only for oven models equipped with trolley) 12

5. STARTING UP THE UNIT 15

5.1 Electrical connection 15

5.2 Water inlet 17

5.3 Draining connection 17

5.4 Vapour exhaust from the cooking chamber 20

5.5 Gas connection 20

5.6 Nameplate (only for gas oven models) 22

6. DISPLAY USE INSTRUCTIONS 24

6.1 Switching the device ON/OFF 24

6.2 Selecting the language 24

6.3 Setting the date and time 25

6.4 Manual cooking/cooking cycle. Parameters 25

6.5 “My recipes” cookbook 30

6.6 Starting a recipe 31

6.7 Special cycles 32

6.8 Automatic cleaning (optional system) 33

6.9 Detergent and rinse 34

6.10 Phases of automatic washing 34

6.11 Programmed automatic start 35

6.12 “Multicook” cooking 35

6.13 “All On Time” cooking 37

6.14 Memorising a “Multicook” / “All On Time” recipe 38

6.15 Registering HACCP data 38

7. ALARMS 39

1. CE Certification

EU DECLARATION OF CONFORMITY

Council Directive(s) to which conformity is declared:

DC 2014/35/EU + DC 2014/30/EU + DC 2011/65/EU + Reglamento (UE) 2016/426

Application of the Standards:

UNE-EN 60335-1:2012+AC:2014+A11:2014+A13:2017+A14:2014+A2:2020+A1:2020; UNE-EN 60335-2-42:2004+Corr:2007+A1:2008+A11:2012; UNE-EN 55014-1:2017+A11:2021; UNE-EN 55014-2:2015; UNE-EN 61000-3-2:2014; UNE-EN 61000-3-3:2013+A1:2020; UNE-EN 203-1: 2014AC; UNE-EN 203-2-2:2007; UNE-EN 60335-2-102:2016

Manufacturer´s address:	**FM CALEFACCIÓN S.L.** **CIF: B-14343594**
Manufacturer´s address:	**CTRA. de Rute km.2.700, C.P.:14900, Lucena Cordoba, España**
Type of device:	**OVEN**
Trade.:	**FM CALEFACCIÓN**
Model:	**STB 604/606/610/616T/686/1086/1886T V7 (electric/gas)**

We, the undersigned, hereby declare under our sole responsibility that the specified equipment is in conformity with the above Directive(s) and Standard(s)

Place: **Lucena**

Date: **01/01/2021**

Signature: **B-14343594**

2. Warranty

The warranty period is **12 months** from the date of purchase of the unit.

The warranty does not cover damages to the glass, lamps, door seals, damage to the insulating material or damage caused by improper installation or maintenance, lack of maintenance, improper repair or misuse.

To process the repair of a unit under warranty or for any other query, please contact your distributor and refer to the following description table.

Distributor:	**Destination country:**
Unit model:	**Serial number:**
Name:	**Date of the request:**
Fault description:	
Address:	
Contact phone number:	**Working hours:**

Warning: improper adjustment, installation, service or maintenance of the unit may lead to damages to the goods or persons. For this reason, please, read this manual thoroughly before starting the unit.

3. General and safety standards

Safety standards and responsibility for installing and maintaining

- Read this manual thoroughly before starting the unit and keep it for further consultation. If you need technical support, contact an authorised technical service.
- Installation, starting and maintenance of the oven shall be carried out by qualified technicians in accordance with the scale and technical characteristics specified by the manufacturer. Likewise, observe the current legislation on safety with regard to installations and occupational safety in force in the country of use.
- Check that the unit is unplugged from the power supply before installing or maintaining.
- Before installing the unit, check that installations are in accordance with the current legislation in the country of use and refer to the indications on the data plate.
- Do not manipulate or disconnect the unit safety devices. This will invalidate the warranty.
- Damages, injuries or fatal accidents could be produced due to the non-observance of the manufacturer's indications.
- If the oven is installed on supports or overlaying parts, use the ones supplied by FM only and follow the assembly instructions inside the packaging.
- Non-original spare parts do not ensure the correct operation of the unit and will imply the loss of the warranty.
- The over must be only used by duly-trained technicians.
- The oven data plate provides the necessary technical information for repair or maintenance. Therefore, avoid removing, damaging or modifying it.
- **Failure to comply with these safety standards will release FM from any responsibility and the warranty will become null and void.**

Safety standards for use

- Please, read this manual thoroughly before starting the unit and keep it for further consultation. If you need technical support, contact an authorised technical service.
- If the unit is not used for a long time, all connections must be interrupted (power supply and water).
- The oven must only and exclusively be used for the purpose it was designed, it is to say, for cooking products such as fresh or frozen bread, pastries and all types of gastronomic products. Any use other than that mentioned may damage the unit.
- Do not put products with a high alcohol concentration into the oven.
- The outside and inside surfaces of the oven should be cleaned frequently to ensure hygiene and proper performance. Do not use abrasive or flammable products, which may damage the unit, to clean those surfaces

- Usage and cleaning different from what is recommended by the manufacturer and with non-authorised products may damage the unit and the user.
- The use of an anti-lime filter at the water supply inlet is recommended. Otherwise, some oven components may be damaged. **Faults caused by lime or water sediment are not included in the warranty.**
- **Failure to comply with these safety standards will release FM from any responsibility and the warranty will become null and void.**

Maximum loads according to the size of the units

CAPACITY	MAXIMUM LOAD	MAX. LOAD PER RACK
4 x (Gn 1/1 o 60/40)	20 kg	Maximum 15 kg per rack
6 x (Gn 1/1 o 60/40)	30 kg	Maximum 15 kg per rack
10 x (Gn 1/1 o 60/40)	45 kg	Maximum 15 kg per rack
16 x (Gn 1/1 o 60/40)	70 kg	Maximum 15 kg per rack
6 x (80/60)	60 kg	Maximum 25 kg per rack
10 x (80/60)	90 kg	Maximum 25 kg per rack
18 x (80/60)	170 kg	Maximum 25 kg per rack

- **Never exceed the maximum load capacity to avoid damaging the unit. Failure to comply with these maximum loading values will release FM from any responsibility and the warranty will become null and void.**

Risk of burns

- Read these warnings carefully and follow its indications when the oven is working or not completely cooled down.
- Only touch the unit control elements and the door opening handle. Avoid touching any other external elements of the oven as they may reach temperatures over 60ºC.
- Wear thermal mittens or similar to move or handle containers or trays inside the cooking chamber.
- Open the oven door slowly and be careful with high temperature vapours coming out from the cooking chamber.

Risk of fire

- If you do not clean the unit properly and as often as needed, greases and food leftovers will be accumulated in the cooking chamber and then, become inflamed.

- Only use the products recommended by the manufacturer. Using other products may damage the unit and invalidate the warranty.
- Only use home-use cleaning products and a soft damp cloth to clean the outside coating. Do not use corrosive or irritating substances.

4. Safety instructions, transport and maintenance

4.1 Unpackaging

Visible damages: When receiving the material, enter a detailed description of the break in the PDA or in the delivery note.

General comments such as “damaged packaging” or “damage can be seen”, etc. will not be accepted. Clear photographs showing the damaged good and packaging must be provided.

Hidden damages: When receiving the material and within 24 hours after reception, once the hidden damage has been checked, photographs showing the damaged good and its corresponding packaging must be provided. The transport agency label must be clearly visible. Photographs showing the content only and exclusively will not be accepted.

In either case, transport incidences should be reported to FM Industrial to manage the replacement of the machine.

If visible damages are detected when receiving the packaged machine, indicate “hits to the oven” at the time of the delivery, take photos of the damages and transport agency label on the packaging. Please, contact FM Industrial immediately.

If apparently package is in good conditions, and damages are detected when unpacking, place the original packaging again on the machine, take pictures of the packaging and transport agency label on the packaging. Next, unpack again and take photos of damages to the machine. Please, contact FM Industrial immediately.

4.2 Transport

Before transporting the unit to its installation site, make sure that:

- Fits through the door
- The floor withstands its weight

Transport should only and exclusively be carried out by mechanical means, such as a pallet jack, and always on a pallet.

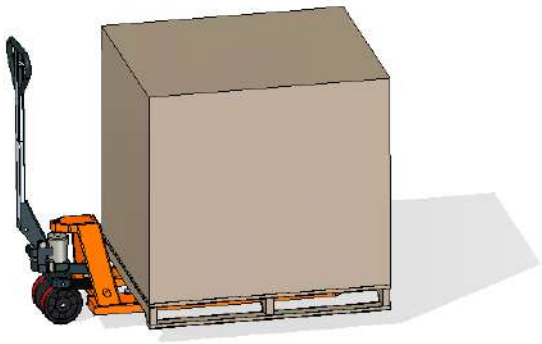

4.3 Preliminary operations

Remove the protection film from the unit. Clean the adhesive residues with an appropriate solvent. Never use abrasive or acid products or tools that may damage the surface.

If your unit is fitted with a core probe kit, remember to remove its silicon protection cap. Otherwise, it could be melted and damage the probe.

4.4 Placing the unit

Place the oven in the selected workplace and keep a safe distance as indicated below. Check that the unit has sufficient cold air inlets through the ventilation registers ensuring correct operation. Otherwise, the unit may overheat, and some components may be destroyed.

- If the oven is installed on an auxiliary support, it must be fixed to it.
- The facilities must be conditioned and meet the regulations in force with regard to safety in installations.
- In addition, the unit must be protected from atmospheric agents.
- The ambient temperature may range between 5ºC and 35ºC maximum for correct operation of the unit.
- Humidity in the facilities should never exceed 70%.

We recommend leaving a 120 mm gap for repair and if there are heat sources or combustible elements, that safety distance must be 700 mm minimum. We also recommend ensuring good ventilation of the unit to prevent overheating its components.

Example of placing the unit without nearby heat sources

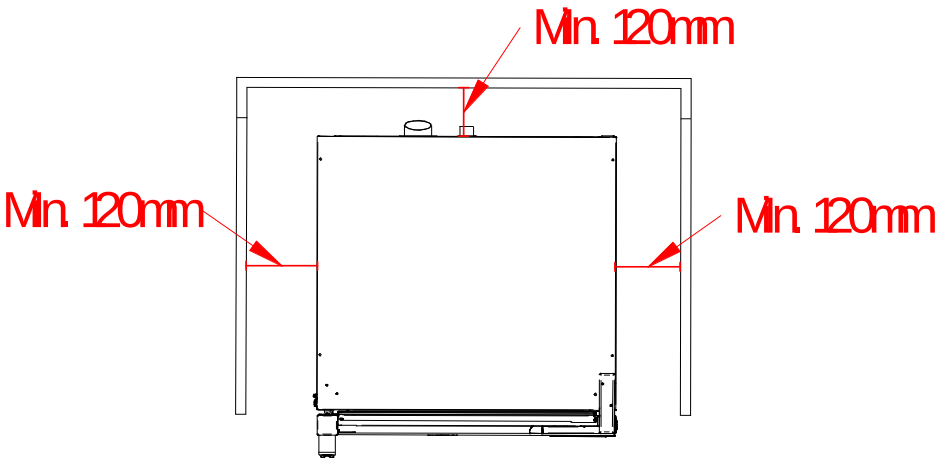

Placing the unit next to heat sources

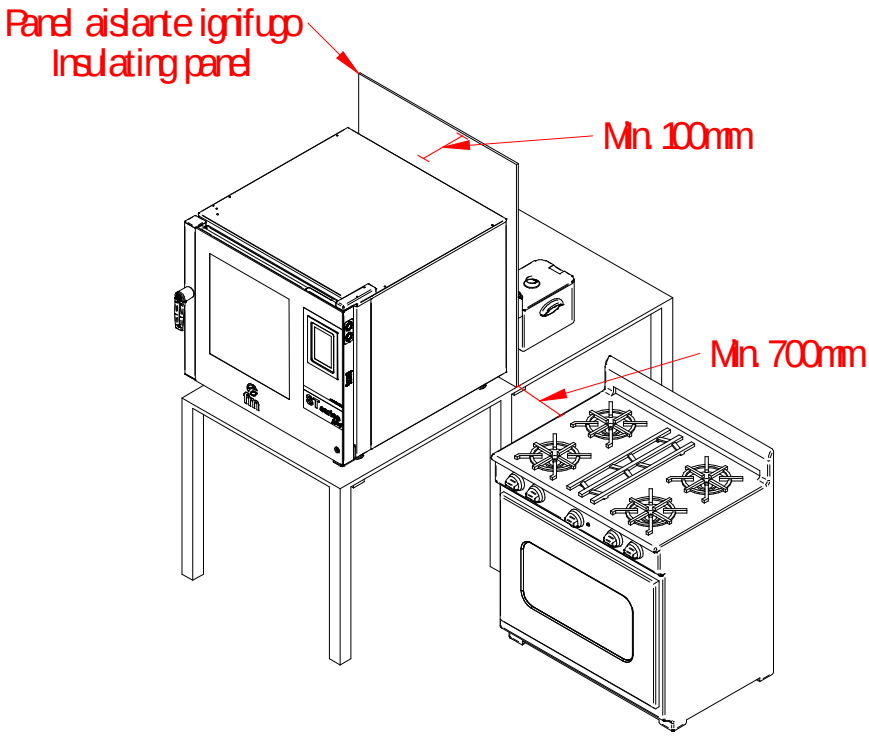

We recommended leaving a free working space of around 500 mm for maintenance operations.

This unit is not suitable for built-in installations.

4.5 Trolley positioning (only for oven models equipped with trolley)

In order to ensure correct positioning of the car inside the oven, the height of the legs must be checked regularly. For this, 180mm is considered as an optimal measure for this task.

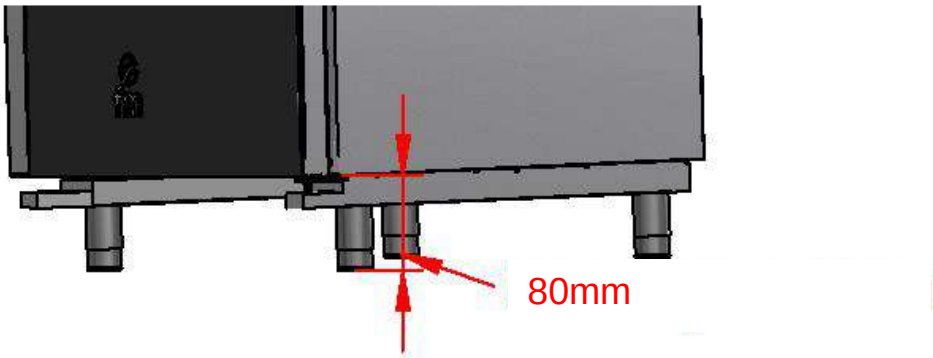

Check the length of the diagonals of the oven inlet, and they must be identical. If not, act again on the regulation of the legs.

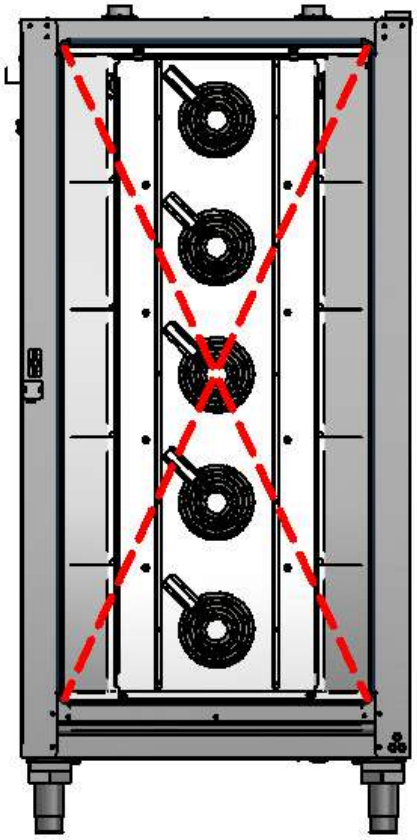

Ensure the correct movement of the trolley inside the oven, avoiding blows or obstructions that can cause the leakage of liquids and lead to burns.

To correctly insert the trolleyriage inside the oven, position it following the guides located at the bottom of the oven.

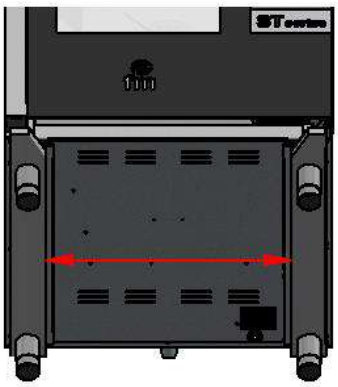

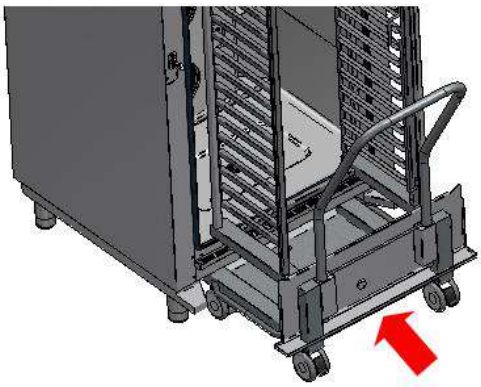

Ensure the correct movement of the trolley inside the oven, avoiding blows or obstructions that can cause the leakage of liquids and lead to possible burns.

The oven should be placed on a completely flat surface. In the event that a ramp is necessary to access the trolley to the oven, it must not have an angle greater than 3 °.

In case of exceeding the maximum angle of entry of the trolley into the oven, there is the possibility of spills of hot liquids that can lead to burns.

5. Starting up the unit

To start up and install the unit appropriately, please follow the points in the "**DOCUMENT FOR INSTALLING AND STARTING UP SMART UNITS**", included in the bag together with this instruction manual.

Remember that any fault or breakage resulting from improper installation or starting up, will make the warranty become null and void.

5.1 Electrical connection

Before connecting the unit to the power supply, check that the electrical grid characteristics match those described in the technical characteristics of each unit. The electrical installation must be performed by authorised technicians and meet the regulations in force.

Preferably, the electrical connection should be performed by mounting and electrical outlet (NOT INCLUDED) of appropriate type and capacity for the maximum current absorbed by the oven phases. If not possible, it could be directly connected to the circuit breaker on the electrical control board.

Next, the types of recommended electrical connections are described:

THREE PHASE 400V

- Three phase connection 400V directly connected to a circuit breaker.

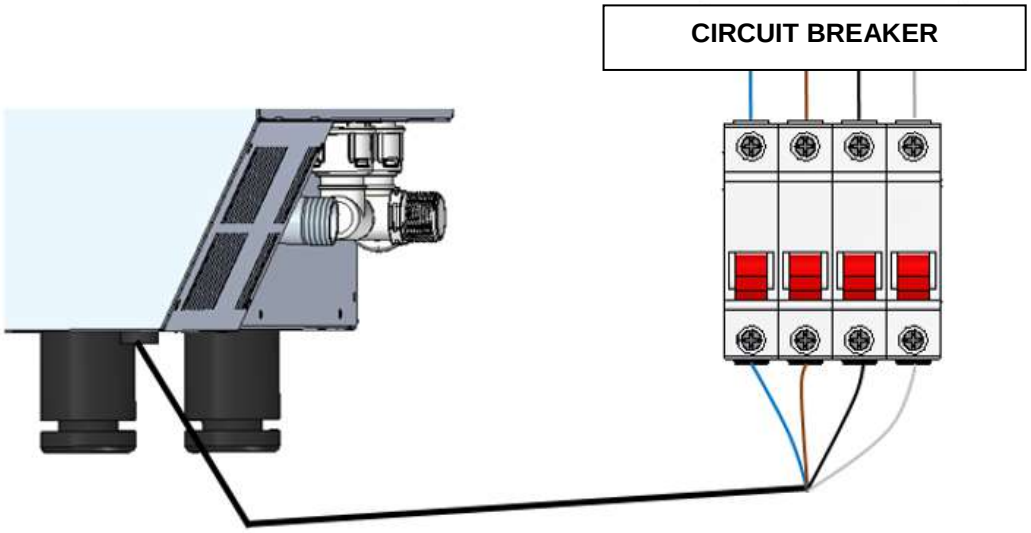

- Three-phase connection 400V connected to a three-phase power socket type CETAC.

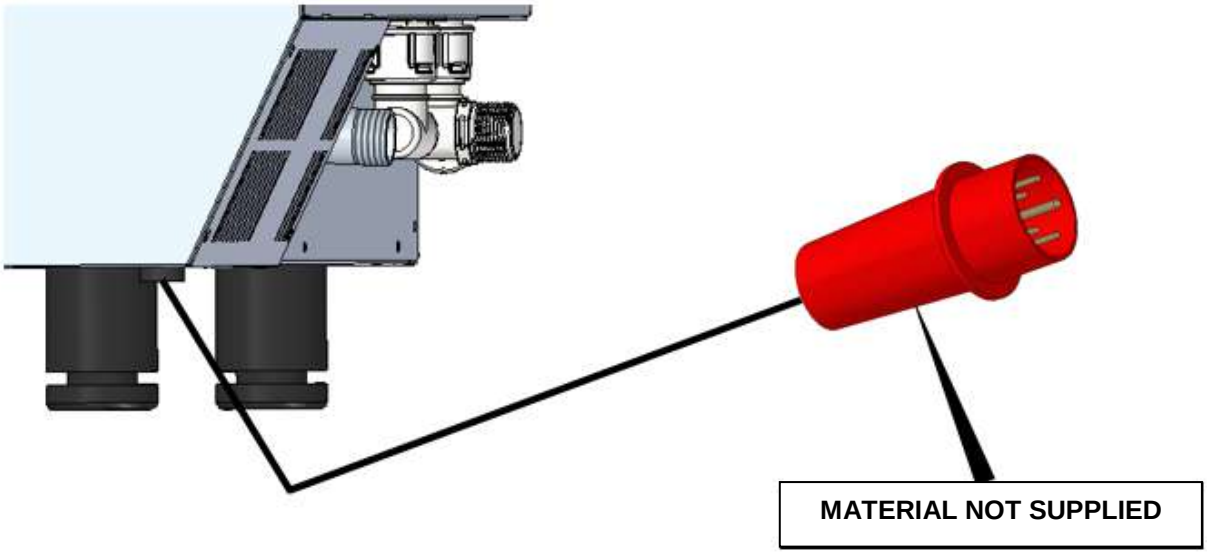

THREE PHASE 230V

- Three phase connection 230V connected to a three-phase power socket type CETAC.

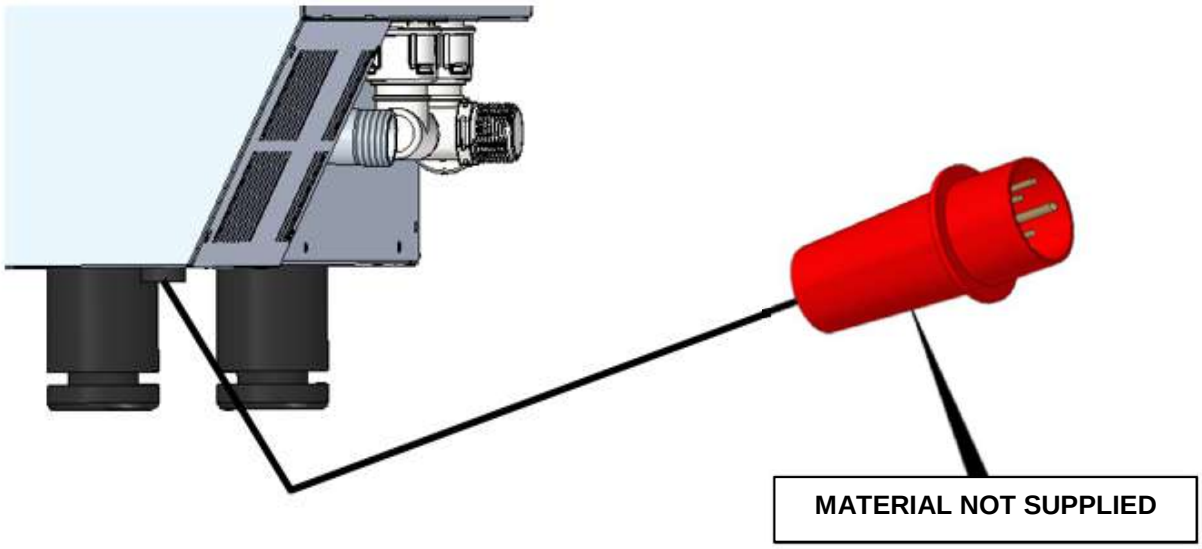

In order to prevent damages from unintentional reset of the cutting thermal device, this unit should not be fed by an external control device, such as a timer, or be connected to a circuit whose supply is regularly interrupted.

An own power supply line protected by an adequately-sized circuit breaker switch and a fixed supply connection is recommended to connect the units.

Observe the colour code of cables. Inappropriate connection may damage the unit.

COLOUR CODE

PHASES	**Grey (L1)**	**Black (L2)**	**Brown (L3)**
NEUTRAL	**Blue (N)**		
GROUNDING	**Yellow / Green** ⏚		

5.2 Water inlet

The use of an anti-lime filter at the water supply inlet and a check valve is recommended. The oven has a ¾ connection for water inlet.

Besides, installing a “digimeter” or digital instrument for measuring the litres of water consumed by the oven is recommended. In this way, you will know when the filter needs be replaced.

Important: Before connecting the water supply, check that there are no residues in the pipe. The pressure of the incoming water should range between 1 and 3 bar, with temperature not higher than 30 ºC. If pressure is higher than these values, a pressure reducer at the inlet should be installed.

5.3 Draining connection

- The oven draining connection should be carried out with discharge pipes ensuring thermal stability, the oven gases may reach high temperatures (85-95ºC).
- It is recommended to connect the oven draining pipe to a syphon to avoid vapour coming out from the oven. This pipe must be inclined **4% minimum** to ensure appropriate operation.
- The draining pipe diameter should NOT be smaller than the draining connection.
- Being specific for each unit. Otherwise, check that the main conduit is dimensioned to ensure the correct flow and without obstacles.
- Having no pinching.

Types of draining:

1. **Wall draining:**

The wall draining outlet must have a vertical ventilation conduit with a diameter **not smaller than 25 mm**, which must be over the device top cover as shown in the image below.

If there is no vertical ventilation conduit installed, proper draining is not ensured, and it may cause faults and the loss of the warranty.

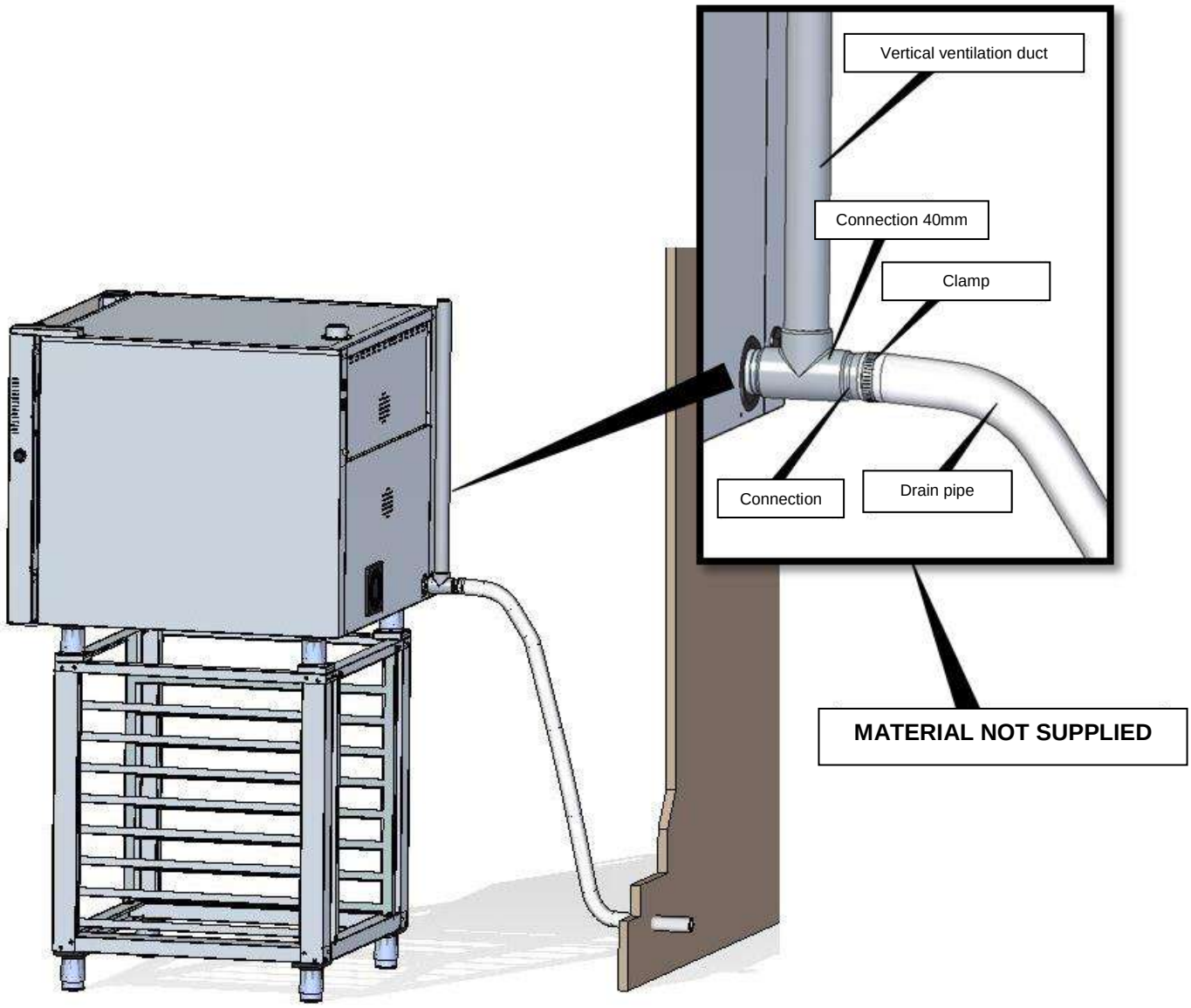

2. **Draining separated with a funnel:**

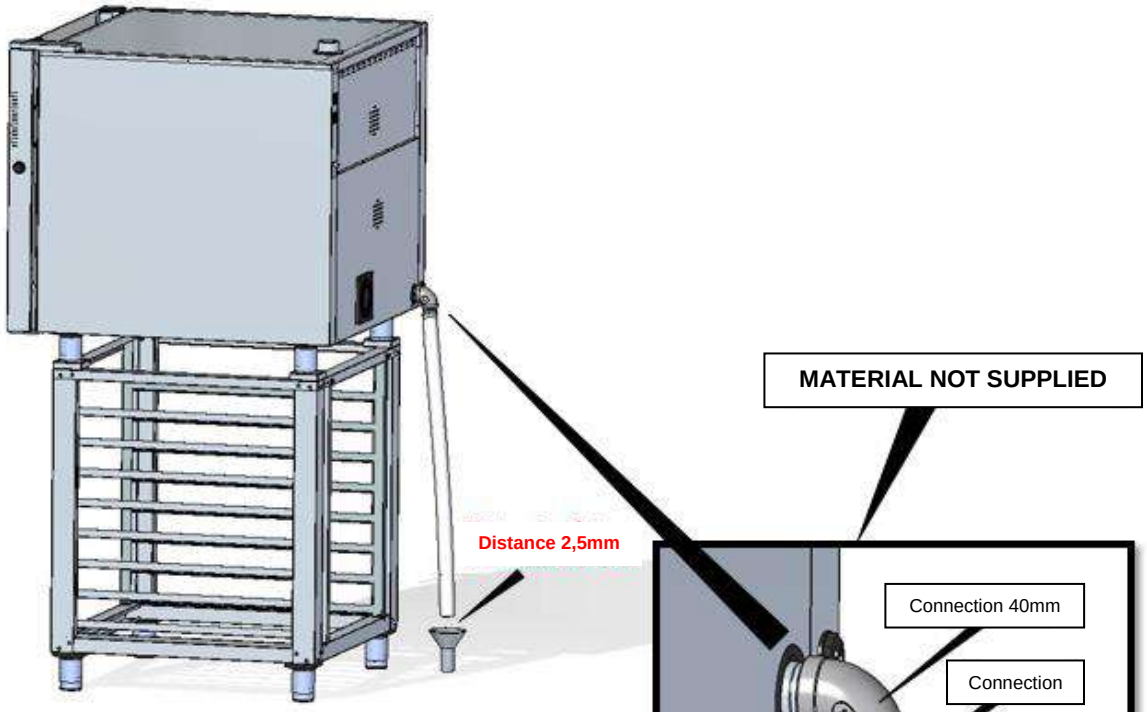

3. **Floor draining:**

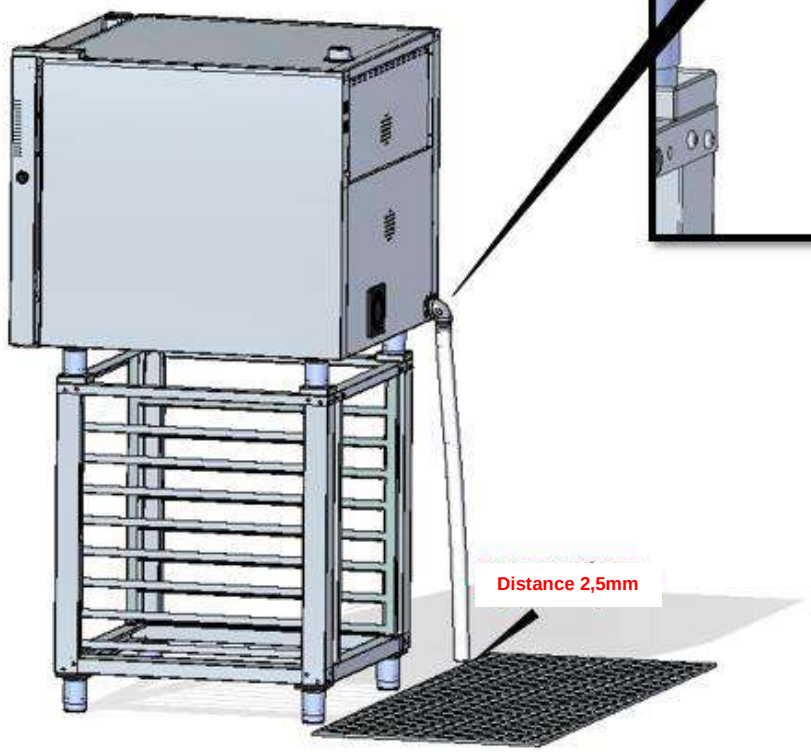

5.4 Vapour exhaust from the cooking chamber

Exhaust gases may be wet and reach high temperatures. Therefore, do not use tubes made of materials not ensuring absolute thermal stability up to 250ºC to channel exhaust gases.

A condenser enabling the condensation of vapours and exhaust of those vapours into a drainage may be adapted to treat cooking vapours.

Important: Do not channel the vapour exhaust from the cooking chamber more than 50 centimeters due to risk of condensation. **This pipeline should be vertical and as straight as possible.**

5.5 Gas connection

For any information related to the installation of gas appliances (connection to the supply line, smoke evacuation, regulation, etc.), please refer to the corresponding section specified in the document "TECHNICAL MANUAL FOR GAS OVEN INSTALLATION".

5.5.1 Connection for flue gas evacuation

All the information specified in this section is for the information of the final user.

The gases resulting from the combustion of the gas must be evacuated to the outside by installing a chimney with a natural draft, or by placing the oven under an extraction hood.

Type evacuation B23: by this procedure, the combustion gases are evacuated to the outside through a natural draft chimney provided with a non-return valve. The installation must have a minimum ascending slope of 10% and, in case there are curved sections, they must be trolleyried out at angles not less than 90º. The first section of the installation must be straight and vertical, with a length not less than 1 mm. The section of the pipe must be the same throughout the installation, and it must not be provided with sections with a lower section than the connection of the discharge pipe. If there is a need to install a horizontal section, it should not exceed 1.5m.

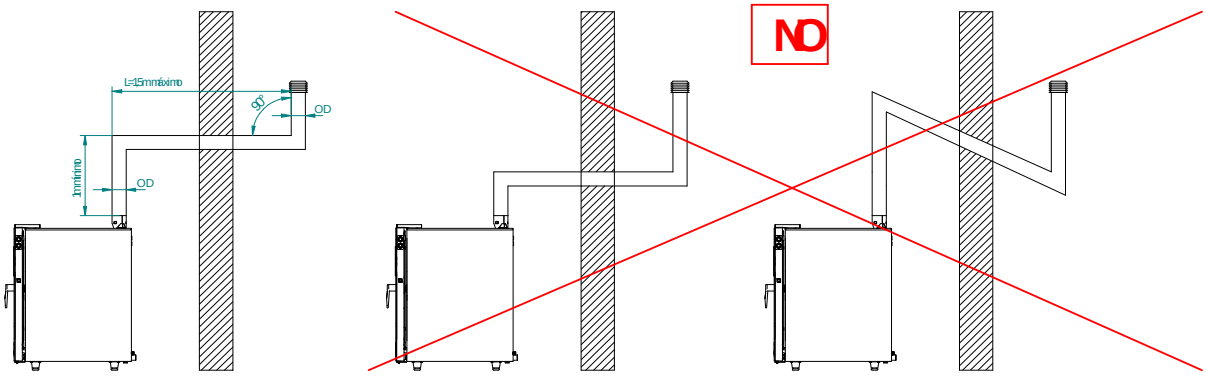

⚠ **For any doubt related to the assembly process necessary for the evacuation of gases, please refer to the technical installation manual.**

⚠ **It is advisable to install a cap at the end of the chimney in order to prevent rainwater from entering the device and prevent possible air returns caused by strong wind.**

⚠ **The temperature of the flue gases can reach 500ºC, so we recommend using stainless steel pipe or similar material resistant to high temperature.**

⚠ **In all appliances with a B23 type exhaust system, the exhaust ducts must be cleaned periodically. The procedure for this cleaning will be determined by the regulations in force in the country where the appliance is installed.**

Type evacuation A3: by this method, the flue gases are evacuated to the outside through a suction hood. The minimum distance to keep between the oven and the hood will be at least 50 cm.

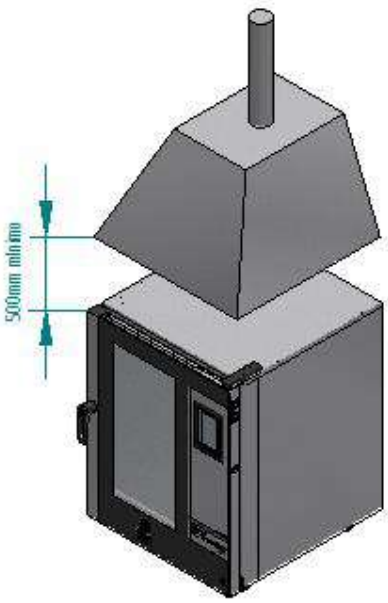

5.6 Nameplate (only for gas oven models)

The nameplate of the furnace is located on the lower left side of the furnace:

FABRICADO POR:B-14343594
PIN: xxxxxxxxx
0370/21
Mod. STG 71 V7 GAS
STG 71 V7 GAS
230v 50/60Hz 1200W
H₂0: 2-4 bar 60°C
TIPO: A3 / B23
8 427561 019197
Nº Serie: H210317001774

G20 (20mbar)	G25 (25mbar)	G31 (37mbar)
1,48 m3/h	1,72 m3/h	1,09 kg/h
Qn= 14 kW	Qn= 14 kW	Qn= 14 kW

PAISES-CATEGORIAS-PRESIONES

	CAT.	mbar		CAT.	mbar
AT	I2H	20	HU	I2H	20
BE	II2E+3P	20/25-37	IE	II2H3P	20-37
CH	II2H3P	20-37	IT	II2H3P	20-37
CY	I2H	20	LT	II2H3P	20-37
CZ	II2H3P	20-37	LU	I2H	20
DE	II2E3P	20-37/50	LV	I2H	20
DK	I2H	20	NO	I2H	20
EE	I2H		PL	I2E+	20/25
ES	II2H3P	20-37	PT	II2H3P	20-37
FI	I2H	20	RO	II2H	20
FR	II2E+3P	20/25-37	SE	I2H	20
GB	II2H3P	20-37	SI	II2H3P	20-37
GR	II2H3P	20-37	SK	II2H3P	20-37
HR	II2H3P	20-37	TR	I2H	20

Nameplate location

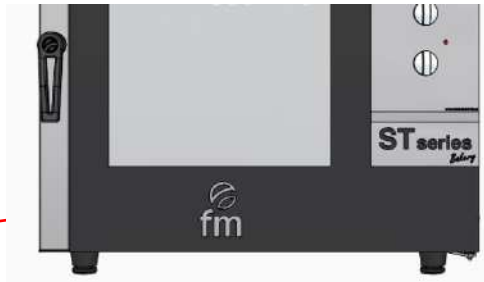

Depending on the country in which the appliance is to be used, it will be preconfigured for use with one or two types of gas. The nameplate specifies the gas use permitted by the oven according to the Factory setting **(1)** and the gas approval according to the country in which the appliance is to be used **(2):**

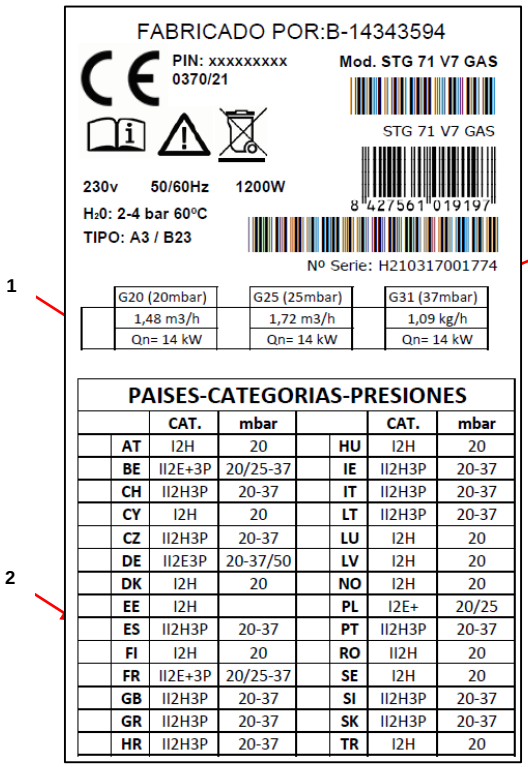
FABRICADO POR:B-14343594
PIN: xxxxxxxxx
0370/21
Mod. STG 71 V7 GAS
STG 71 V7 GAS
230v 50/60Hz 1200W
H₂0: 2-4 bar 60°C
TIPO: A3 / B23
8 427561 019197
Nº Serie: H210317001774

1

G20 (20mbar)	G25 (25mbar)	G31 (37mbar)
1,48 m3/h	1,72 m3/h	1,09 kg/h
Qn= 14 kW	Qn= 14 kW	Qn= 14 kW

2

PAISES-CATEGORIAS-PRESIONES

	CAT.	mbar		CAT.	mbar
AT	I2H	20	HU	I2H	20
BE	II2E+3P	20/25-37	IE	II2H3P	20-37
CH	II2H3P	20-37	IT	II2H3P	20-37
CY	I2H	20	LT	II2H3P	20-37
CZ	II2H3P	20-37	LU	I2H	20
DE	II2E3P	20-37/50	LV	I2H	20
DK	I2H	20	NO	I2H	20
EE	I2H		PL	I2E+	20/25
ES	II2H3P	20-37	PT	II2H3P	20-37
FI	I2H	20	RO	II2H	20
FR	II2E+3P	20/25-37	SE	I2H	20
GB	II2H3P	20-37	SI	II2H3P	20-37
GR	II2H3P	20-37	SK	II2H3P	20-37
HR	II2H3P	20-37	TR	I2H	20

Mark for change of use to second type of gas

If only one type of gas is permitted, conversión to a second type is not allowed. If the use of a second type of gas is permitted, in the event of a changeover by a qualified and authorized technician, this will be indicated on the nameplate. For more information, see the technical installation manual.

The reference values indicated on the nameplate have been obtained under laboratory conditions in accordance with current stardards. These values are subject to variations, depending on the operating conditions and environment of the device.

6. Display use instructions

Attention! Please, read these instructions thoroughly before starting the device.

6.1 Switching the device ON/OFF

Please, follow these steps to switch the device on:

- Press the icon to activate the screen.
- Please, follow these steps to switch the device off:
- Check that there are no ongoing operations.
- Press the icon to set the screen at stand-by mode.

ON

OFF

If there is a power supply shut off when the device is switched on or off, the device will remain off when the power supply is restored. If the power supply shuts off for less than 60 minutes during a cooking/cooking cycle, when the power supply is restored the cooking/cooking cycle will continue working and reset for the time the oven has been without electricity. If there is a change of phase during the power supply shut off, it will start at the beginning of the next phase when the power supply is restored. If the power supply shut off is longer than 60 minutes, the device will remain off when the power supply is restored.

6.2 Selecting the language

Please, follow these steps to set the menu language:

1. Make sure that the device is on and that there are no ongoing operations.
2. Press the icon on the main menu to go to the settings menu, select **"language"**, and then, choose the language you want.
3. Press the icon to go back to the main menu.

6.3 Setting the date and time

Make sure that the device is on and that there are no ongoing operations.

1. Press the icon on the main menu to go to the settings menu.
2. Select **"Clock"** to modify the date and time.
3. Press the digit **"h"** and icons or (or the scroll bar) to set the hour you want.
4. Press the digit **"m"** and icons or (or the scroll bar) to set the minutes you want.
5. Press the digit **"day of the week"** and icons or (or the scroll bar) to set the day of the week you want.
6. Press the digit **"dd"** and icons or (or the scroll bar) to set the day you want.
7. Press the digit **"mm"** and icons or (or the scroll bar) to set the month you want.
8. Press the digit **"yyyy"** and icons or (or the scroll bar) to set the year you want.
9. Press the icon to save all changes made.

6.4 Manual cooking/cooking cycle. Parameters

Trolley oven tap

- **Preheating**

Every cooking/cooking process may have a preheating cycle, whose target temperature conditions will be determined by the selected mode and the temperature chosen for cooking/cooking.

If your oven has a car, we recommend that it be introduced when performing a preheating cycle. If this is not possible, use an accessory cover included for this purpose.

Preheating

SOFT PREHEATING: To activate this mode, press icon no. 1 until the message **"PREHEAT SOFT"** is displayed on the screen. In this case, the preheating process will be active until reaching a temperature of +10°C with regard to the selected cooking/cooking temperature.

MEDIUM PREHEATING: To activate this mode, press icon no. 1 until the message **"PREHEAT MEDIUM"** is displayed on the screen. In this case, the preheating process will be active until reaching a temperature of +20°C with regard to the selected cooking/cooking temperature.

HARD PREHEATING: To activate this mode, press icon no. 1 until the message **"PREHEAT HARD"** is displayed on the screen. In this case, the preheating process will be active until reaching a temperature of +30°C with regard to the selected cooking/cooking temperature.

- **Types of cooking/cooking**

DRY HEAT COOKING/COOKING: To activate this type of cooking/cooking, press icon no. 1. In this case, the vapour injection will be stopped, and the work temperature of the cooking/cooking chamber will range between 30°C y 270°C.

VAPOUR COOKING/COOKING: To activate this type of cooking/cooking, press icon no. 2. In this case, the humidity control is enabled, allowing the user to work with time ranges between 0 sec. and 45 sec., and at a temperature value of the cooking/cooking chamber ranging between 30°C and 130°C.

COMBI COOKING/COOKING: To activate this type of cooking/cooking, press icon no. 3. In this case, the humidity control is also enabled allowing the user to work with time ranges between 0 sec. and 45 sec. On the other hand, the chamber temperature will range between 30°C and 250°C.

Types of cooking

- **Cooking/cooking modes**

TIMER: To activate this cooking/cooking mode, press icon no. 1. In this case, the cooking/cooking phase has a determined time that is pre-set by the user.

CORE PROBE: To activate this cooking/cooking mode, press icon no. 2. In this case, the user should only program the temperature wanted inside the food and the temperature of the cooking/cooking chamber. The cooking/cooking phase will finish when the core probe detects that the food has reached the temperature pre-set by the user.

Modes cooking

DELTA T: To activate this mode, press icon no 3. This cooking/cooking mode is also known as "slow cooking/cooking". In this mode, the user sets the temperature set point for the core probe and a delta T (temperature difference between that programmed for the core probe and the cooking/cooking chamber).

There are different parameters that can be modified in each type and mode of cooking/cooking selected:

- Temperature set point of the cooking/cooking chamber: It can only be set to the time-controlled cooking or core probe mode, regardless of the type of cooking/cooking selected (dry heat, vapour and combi).
- Temperature difference "Delta T": It can only be set to the Delta T (ΔT) cooking/cooking mode, regardless of the type of cooking/cooking selected (dry heat, vapour and combi).
- Humidity: It can only be set to the types of vapour and combi cooking/cooking. By default, the control of humidity can be set to percentage from 10% to 100 %, but injection time will be shorter in the type of combi cooking/cooking.
- Duration of the phase: It can only be set to the time-controlled cooking/cooking mode.
- Temperature set point of the core probe: It can only be set to the Delta T (ΔT) and core probe cooking/cooking modes.
- Fan speed: It can be set to all types or modes of cooking/cooking selected, with values ranging between 10% and 100%.
- Opening of the fumes exhaust valve: This allows the user to program the minutes the damper must be open before finishing the cooking/cooking process.

6.4.1 Setting the cooking cycle

1. Make sure that the device is on and that there are no ongoing operations.
2. Press the icon in the main menu to select the manual cooking/cooking mode.

- **Selecting the type of cooking:**

3. Press the icons to select the type of cooking (dry heat, vapour and combi).

- **Selecting the type of cooking**

4. Press the icons to select the mode of cooking (dry heat, vapour and combi).

- **Selecting the temperature set point of the cooking cooking chamber (only possible with time-controlled cooking mode and core probe):**

5. Press the icon and next, press icons or (or move the scroll bar) to select the temperature value wanted. Press again to confirm the value selected.

- **Selecting the temperature set point of the core probe (only possible with core probe cooking modes and Delta T (ΔT):**

6. Press the icon and next, press icons or (or move the scroll bar) to select the temperature value wanted. Press again to confirm the value selected.

- **Selecting the phase time (only possible with time-controlled cooking mode):**

7. Press the icon and next, press icons or (or move the scroll bar) to select the time value wanted. Press again to confirm the value selected.

- **Selecting the Delta T (ΔT) value (only possible with ΔT cooking mode):**

8. Press the icon and next, press icons or (or move the scroll bar) to select the temperature value wanted. Press again to confirm the value selected.

- **Selecting the value for the humidity time (only possible with vapour or combi cooking and with any of the three cooking modes):**

9. Press the icon and next, press icons or (or move the scroll bar) to select the humidity time wanted. Press again to confirm the value selected.

- **Selecting the fan speed (with any type or mode of cooking):**

10. Press the icon and next, press icons or (or move the scroll bar) to select the speed percentage wanted. Press again to confirm the value selected.

- **Selecting the opening time of the vapour valve:**

11. The time value can only be selected at time-controlled cooking mode. In all the other modes, only the opening or closing can be selected at the time the user wants. To do so, press the icon and next, press icons or (or move the scroll bar) to select the time value wanted if at the time-controlled cooking mode, or opening/closing if at the modes for core probe cooking or Delta T (ΔT). Press again to confirm the value or state selected.

- **Adding a phase to the cooking cycle:**

12. Press the icon to add a new phase to the cooking cycle, up to a maximum of 6 phases. To set the rest of options within each phase, repeat the steps above. Press icons or to select the cooking phase wanted and previously created. Press to delete an unwanted cooking phase.

6.4.2 Starting a cooking cycle

1. Set the cooking cycle wanted (see point *6.4.1 "Setting the cooking cycle").*
2. To continue, press to have a summary of the set recipe displayed.
   Next, press the icon START to start the preheating cycle, if this option has been selected. The door opening and closing will stop the preheating operation (if selected) and the start of the 1st phase of the cooking cycle. The opening of the vapour valve can be modified during the cooking process by pressing the icon . In this way, its opening will switch to manual mode.

Summary screen

3. Press the icon to switch the lamp inside the cooking chamber on or off.

4. Press the icon to have all the values of the process variables and the state of the oven components displayed on the screen. To do so, the user should have a key, which is only accessible for the maintenance service.

At the end of the cooking cycle, an acoustic signal will be activated informing about the end of the cycle. Next, the option for extending the cooking cycle will be given. To do so, please follow the steps below:

1. Press the icon .
2. Press icons or (or move the scroll bar) to select the time value wanted. Press again to confirm the new time value selected.

6.4.3 Stopping the ongoing cooking cycle

1. Press the icon STOP to stop an ongoing cooking cycle.

Stopping the cooking cycle

6.5 “My recipes” cookbook

“My recipes” function allows the cycle settings in a recipe to be saved. When memorised, the oven will work with the settings saved.

- **Memorising a recipe**

1. Set a cooking cycle. To do so, follow the steps described in point 6.4.1.
2. Press the icon to start the recipe saving process.
3. Press the icon to select the recipe saving position.
4. Pulse Press the position where you want to save the recipe and then, press to confirm this action.
5. Enter the name for the recipe and then, press to confirm.
6. Press the icon to exit and confirm all the saving process.

6.6 Starting a recipe

This oven has two types of recipes:

1. ***FM INDUSTRIAL Cookbook***: In this cookbook, images and recipes configured and already pre-set are included, with a wide range of foods. You only need to select the type of food you want to cook, and the oven will do the rest.

2. ***USER'S cookbook:*** Users may set and store their own recipes (up to a maximum of 48 recipes).

- **Starting a memorised recipe:**

1. Press to go to the recipe library.
2. Select the recipe you want. This recipe can be one of those already set in the screen or a recipe previously saved by the user.
3. Press the icon **START**.

Acceso a una receta

- **Deleting a memorised récipe:**

1. This action only applies to recipes that have been created by the user. The recipes registered by default may only be modified in some of their parameters, but they cannot be deleted.
2. Press the icon to go to the list of recipes entered by the user
3. Select the recipe or position you want to delete and then, press the icon .

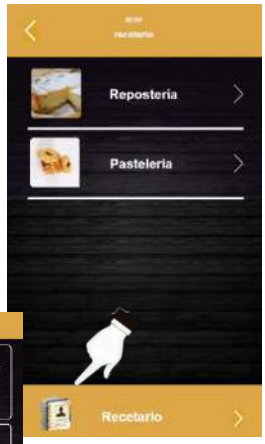

Deleting a cookbook

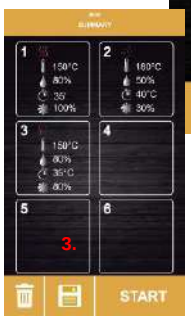

6.7 Special cycles

"Special cycles" menu allows the user to use work cycles created by **FM INDUSTRIAL.** Next, the enabled special cycles are described:

- **Regeneration cycle with core probe** (enabled in models with core probe).
- **Time-controlled regeneration cycle.**
- **Proofing cycle.**
- **Cooling-down cycle.** Designed to cool the oven down under 50 º C (it is recommended to execute it with the door open).
- **Cleaning** (*see section 6.8).*

The following tables show the factory settings for each of the cycles described above:

REGENERATION CYCLE WITH CORE PROBE		
Setting	**Value**	**Maximum / Minimum**
Chamber temperature	110ºC	20…180ºC
Humidity	70%	40…100%
Core probe temp.	70ºC	20…100%
Fan speed	Minimum (only if the oven has various speeds)	
Valve opening	At the end of the cycle	

TIME-CONTROLLED REGENERATION CYCLE		
Setting	**Value**	**Maximum / Minimum**
Chamber temperature	110ºC	20…180ºC
Humidity	70%	40…100%
Time	25 min	1… INFINITE
Fan speed	Minimum (only if the oven has various speeds)	
Valve opening	At the end of the cycle	

PROOFING		
Setting	**Value**	**Maximum / Minimum**
Chamber temperature	30 ºC	20…50 ºC
Humidity	80 %	40…100 %
Time	2 hours	1 min…5 horas
Fan speed	Minimum (only if the oven has various speeds)	
Valve opening	At the end of the cycle	

COOLING DOWN		
Setting	**Value**	**Maximum / Minimum**
Chamber temperature	50 ºC	-
Humidity	0 %	-
Time	Until the chamber temperature <50ºC	
Fan speed	Maximum	
Valve opening	At the beginning of the cycle	

If the default cycles do not meet your requirements, these cycles can be modified and memorised like a recipe. To do so, go to the special cycle wanted (proofing, regeneration, cooling-down...) and proceed in the same way as in the memorising process of a recipe.

- **Starting a special cooking cycles:**

1. Press the icon to go to the *"Special cycles"* menu.
2. Press the special cycle wanted (regeneration, proofing or cooling-down).
3. Next, press the icon START to start the cycle.

Access to the "special cycles" menu

6.8 Automatic cleaning (optional system)

This device is prepared to control the oven automatic cleaning system. To do so, there are three different cleaning programs:

- **SOFT Cleaning *45 minutes*:** Suitable for frequent use, for non-greasy and low-resistant dirt.
- **MEDIUM Cleaning *1 hour and 10 min*:** Suitable for low-resistant dirt produced from the execution of several consecutive cooking processes.
- **HARD Cleaning *1 hour and 36 minutes*:** Suitable for greasy and highly resistant dirt.

⚠ **If your oven has a trolley, keep in mind that it must be inserted in order to start a wash cycle.**

Follow these steps to start a cleaning cycle:

1. Press the icon to go to the *"Special cycles"* menu.
2. Press the icon to go to the automatic cleaning menu.
3. Next, select the cleaning program wanted (**SOFT, MEDIUM or HARD**).
4. To finish, press the icon START to start the cleaning cycle.

6.9 Detergent and rinse

This device is prepared to control the oven automatic cleaning system. To do so, there are three different cleaning programs:

Warning: Use rubber protection gloves and protection mask or goggles before manipulating these chemical products.

Detergent: It is a concentrated alkaline detergent designed for FM-ovens automatic cleaning.

The use of any other detergent or cleaning product may produce a bad finish or damages resulting in the device loss of warranty.

Rinse: It is an acid-base formulation suitable for mixing with water providing a faster drying and a better finish.

The use of any other rinse product may produce a bad finish or damages resulting in the device loss of warranty.

DETERGENT **RINSE**

- **How to use**:

Insert the rinse and detergent tubes of the oven in their respective containers. Start an automatic cleaning process following the steps in section 6.8.

If the oven has just been used and it is still hot, the cleaning program will not start until the temperature of the oven chamber decreases below 100 ºC. To do so, follow the instructions on the screen.

Warning: Remove any food leftover after a wash cycle has been performed.

Info **Please, contact your distributor directly to buy these products.**

6.10 Phases of automatic washing

Each cleaning cycle consists of the following phases:

1. **Pre-cleaning phase:** the cooking chamber of the oven increases its temperature to facilitate the cleaning process. The oven injects vapour to the chamber for 15 minutes. Next, the cleaning arm starts injecting water to rinse for 2 minutes.
2. **Cleaning phase:** the cleaning system starts injecting detergent and will pause to have the detergent acting for a pre-set time. Then, it will rinse with water.
3. **Rinsing phase:** the cleaning system starts injecting the rinse and will pause to have the rinse acting for a pre-set time. Then, it will rinse with water.
4. **Drying phase:** In this phase, the oven resistances and fans are activated to dry the oven.

6.11 Programmed automatic start

The automatic start function allows the user to program up to 9 weekly starts of the oven, giving the option to choose the recipes with which the user wants to start the oven.

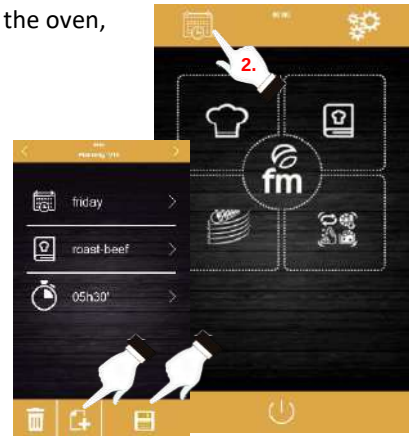

- **Setting the automatic start:**
  1. Check that there is at least one memorised recipe.
  2. Press the icon to go to the weekly programming.
  3. Next, set a day, time and recipe for the oven automatic start. If you want to register an additional program for another different start, press the icon.
  4. Press the icon to accept and save the data selected.

Activating the automatic start

- **Activating the automatic start:**
  1. Check that there is at least one programmed start.
  2. Press the icon to switch the oven off. Next, press the icon to activate the starting of the oven with programming function. Then, the programming data will be displayed on the screen.

6.12 “Multicook” cooking

This system allows the user to cook different foods with different coking time, informing about the end of the cooking process of each food when the trays are ready.

There are 2 different ways to go to the “multicook” cooking:

- **Setting a multicook cooking cycle from a memorised recipe:**

1. Check that there are no ongoing operations.
2. Set the “multicook” cooking cycle from a recipe. Next, press the icon to go to the cookbook.
3. Select an already programmed recipe from the cookbook. The screen shows the number of selectable trays. At the bottom of the screen, the cooking parameters and the present temperature of the unit is displayed.
4. Press the icon of the level wanted. Next, press the icon **“TRAY”** to include other recipes. The unit will filter between the recipes compatible with the selected parameters.

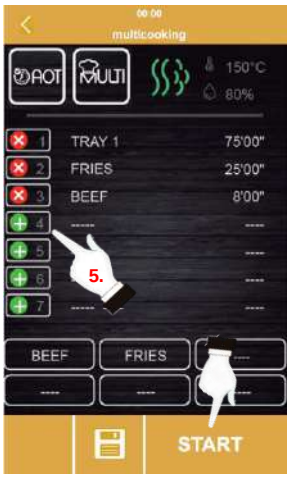

5. To select a new tray without entering the cookbook, press the level wanted only, for example, . Take into account that this tray will undergo the same cooking conditions (percentage of humidity and temperature) as the first selected tray.
6. Next, press 0:00:00 to modify the cooking time for this food.
7. Press icons or (or move the scroll bar) to select the time value wanted.
8. Press START to confirm and start the cooking process.
9. After finishing the pre-heating operation, open the oven door and insert all the set trays. After finishing the cooking cycle for each food, an acoustic signal is activated, and that tray will light up green on the screen. At that time, open the oven door, remove the tray and close the oven door again. Repeat this step until finishing all the programmed recipes.
10. To stop this operation at any time, press the icon STOP.

- **Setting a multicook cooking cycle from a manually set recipe:**

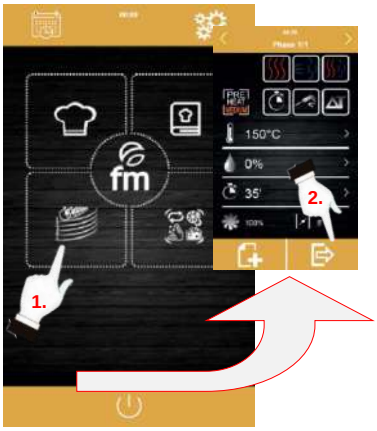

1. Set the multicook cooking cycle from a recipe. To do so, press to go to the cookbook.
2. Select the cooking parameters wanted (pre-heating, humidity, temperature,...) and then press to accept.
3. Press of the level wanted to include another tray. Take into account that this tray will undergo the same cooking conditions (percentage of humidity and temperature) as the first selected tray.
4. Next, press 0:00:00 to modify the cooking time of this new tray.
5. Press or (or move the scroll bar) to select the time value wanted.
6. Press START to confirm and start the cooking process.
7. After finishing the pre-heating operation, open the oven door and insert all the set trays. After finishing the cooking cycle for each food, an acoustic signal is activated, and that tray will light up green on the screen. At that time, open the oven door, remove the tray and close the oven door again. Repeat this step until finishing all the programmed recipes.
8. To stop this operation at any time, press the icon STOP.

6.13 “All On Time” cooking

This function allows the user to cook different foods with the same finishing time. The oven shows when to insert each pre-set tray. The result of the cooking is the simultaneous finishing of all foods.

To set an “all on time” cooking, first, follow the steps described in point 6.12 (setting a multicook cooking cycle from a memorised recipe or from a manually set recipe).

1. Once set, press AOT to activate the “all in time” cooking mode.
2. After finishing the pre-heating operation, open the oven door and insert the trays the oven requires (shown in green on the screen). Close the oven door. Repeat this step when the oven produces an acoustic signal and a tray is shown in green. All products will finish at the same time.
3. To stop this operation at any time, press the icon STOP.

6.14 Memorising a “Multicook” / “All On Time” recipe

Follow the steps below to save a recipe in the memory.

1. Set a cooking cycle following the steps in 12 or 6.13.
2. Press to save the set cycle.
3. Select the position number in which you want to save the recipe.
4. Enter the name of the recipe.
5. Press the icon ✔ to confirm the name.
6. Press to exit and confirm the recipe.

6.15 Registering HACCP data

The oven is enabled to register HACCP data, which allow to evaluate dangers and establish control systems focussed on prevention.

The HACCP application increases the food safety and offers other important advantages, such as facilitating the competent authority their work on inspection and promotion of international trade raising confidence in food safety.

These are some of their main objectives:

- Strengthening food safety.
- Facilitating compliance with the food legislation.
- Promoting exports raising confidence in food safety.
- Facilitating agility and transparency in controls.

For that purpose, this unit allows registration of the following events and temperatures:

Events:

- Used recipe
- Door opening and closing
- Start and end of each cooking phase
- Temperature sampling every 5 minutes.

Temperatures:

- Chamber temperature
- Core probe temperature

Executing registration of HACCP data

1. Have the screen at “PRESS TO ACTIVATE” mode.
2. Insert an external memory into the USB port in the oven display.
3. Press “Download HACCP”
4. Select the date and time from which you want to download the data. Then, press ✔ .
5. Next, press ✔ again to confirm “downloading HACCP?”.
6. Remove the external memory.

All these data can be viewed on a computer that allows reading text archives.

⚠ **The date and time of the unit should be updated for the registration of HACCP data to work appropriately.**

7. Alarms

If an alarm is produced, a sound will be activated. An icon ⚠ and an alarm code will be displayed on the screen. Touch on the centre of the screen to stop the alarm. The table below shows the meaning of the device alarm codes.

ALARM	DESCRIPTION
RTC Alarm	Alarm description: *RTC (Misconfigured date and time)* Solution: - *Set present date and time for the alarm to stop. To do so, go to Settings → Clock.*
Chamber probe Alarm	Alarm description: *Chamber probe* Solutions: - *Check the chamber probe.* - *Check that the chamber probe is correctly connected to the power board.* - *If the problem continues, replace the probe.* Main consequences: - *If the alarm is activated when the device is ON, no cooking cycle can be started.* - *If the alarm is activated during a cooking cycle, this cycle will stop.* - *The outlet for temperature adjustment will be disconnected.*
Core probe Alarm	Alarm description: *Core probe* Solutions: - *Check the core probe.* - *Check that the core probe is correctly connected to the power board.* - *If the problem continues, replace the core probe.* Main consequences: - *If the alarm is activated when the device is ON, no Delta T cycle can be started with even a core probe.*

	- *If the alarm is activated during a Delta T or with a core probe cooking cycle, this cycle will stop.*
PF Alarm	<u>Alarm description:</u> *Shutting off the power supply or oven switched off unproperly. It is activated when there is a power supply shut off or when the oven is switched off unproperly. To switch it off properly, the oven must be switched off when "PRESS TO ACTIVATE" is displayed on the screen.* <u>Solutions:</u> - *Press the alarm so that it disappears from the screen.* - *Check the device electrical connection.* - *Check the unit power supply.* - *Check that the oven is being switched off when "PRESS TO ACTIVATE" is displayed on the screen.* <u>Main consequences:</u> - *If the power supply shuts off during a cooking/cooking cycle, when the power supply is restored the cycle will start from the beginning of the cycle if the power supply shut off is lower than 60 minutes, otherwise, the cycle will be interrupted.*
COM. BASE Alarm	<u>Alarm description</u>: *COM BASE (without communication between the control module and the screen).* <u>Solutions:</u> - *Check the wiring connecting the screen to the power board. To do so, check that the white wire (pin 35) and yellow wire (pin 34) are appropriately connected both to the power board and to the screen.* <u>Main consequences:</u> - *If the alarm is activated when the device is ON, no cooking cycle can be started.* - *If the alarm is activated during a cooking cycle, this cycle will stop.*

Thermal protection Alarm	Alarm description: *Motor thermal protection.* Solutions: - *Switch the oven off and switch it on again after 10 minutes.* - *Check visually if there is a motor in poor conditions. If so, replace it.* - *If possible, check that there is continuity in the internal klixon of motors to detect which motor is in poor conditions. When detected, replace it.* Main consequences: - *If the alarm is activated when the device is ON, no cooking cycle can be started.* - *If the alarm is activated during a cooking cycle, this cycle will stop.*
HT Alarm	Alarm description: *Overheating of the oven power board.* Solutions: - *Check that the plate cooling fan works appropriately.* - *Check that the oven is installed according to the safety distances shown in this manual and that there is no element obstructing the outlet of hot air through the ventilation holes.* - *If the alarm does not stop, contact the Technical Support Service.*
	Alarm description: *Open-door alarm.* Solutions: - *Check that the door is completely closed.* - *Check that the door sensor is not damaged. If so, replace it.* - *Move the door sensor closer to door.* - *If the alarm does not stop, contact the Technical Support Service.* Main consequences: - *If this alarm is activated during a cooking cycle, this cycle will stop until the door is closed.*

Safety thermostat alarm	Alarm description: *Safety thermostat.* Solutions: - *Reset the safety thermostat.* - *Check that the safety thermostat is dully connected.* - *Check that (pin 9) of the power pale is appropriately connected.* Main consequences: - *If the alarm is activated when the device is ON, no cooking cycle can be started.* - *If the alarm is activated during a cooking cycle, this cycle will stop.*
Alarm burner chamber (only gas ovens)	Alarm description: *Chamber burner lock* Solutions: - *For alarm type n1E513, acknowledge alarm and start it again. The oven will make a maximum of 7 start attempts.* - *For type n1E13 alarm, unplug oven from power supply and plug in again after 10 seconds.* - *For alarm type n1E100, do not manipulate the oven and contact an authorised tech service.* - *For alarm type n1E515, check that the exhaust is not clogged, acknowledge alarm and start it again.* If the alarm repeats, carry out the following checks: - *Check gas supply to the oven. Verify correct inlet pressure and correct valve opening in the main supply line.* - *Reverse schucko polarity. To do this, disconnect and connect the plug by reversing the poles.* Main consequences: - *If the alarm occurs when the device is on, no cooking cycle can be started.* *If the alarm occurs during a cooking cycle, it will be interrupted.*

FM CALEFACCIÓN S.L.
B-14343594
Carretera de Rute, km. 2'700
14900 Lucena (Córdoba)
www.fmindustrial.es